HIP

Operative Technique



ALTEON®

HA Femoral Stem

Primary Femoral Solutions

advita ORTHO



TABLE OF CONTENTS

OPERATIVE TECHNIQUE OVERVIEW 2

PRE-OPERATIVE PLANNING 3
- TOOLS 3
- ESTABLISHMENT OF REFERENCE POINTS 3
- DETERMINE LIMB LENGTH 3

DETAILED OPERATIVE TECHNIQUE 4
- APPROACH AND OSTEOTOMY 4
- FEMORAL CANAL ENTRY 5
- FEMORAL CANAL BROACHING 6
  - Broach Assembly/Disassembly 6
  - Femoral Broaching 6
  - Calcar Preparation 7
- TRIAL REDUCTION 8
  - Trial Component Insertion 8
  - Trial Component Removal 8
- FINAL COMPONENT PLACEMENT 9
  - Final Stem Insertion 9
  - Femoral Head Impaction 9
- FINAL REDUCTION 10
- IMPLANT REMOVAL 10
- CLOSURE 10

IMPLANT ORDERING INFORMATION 11

SYSTEM SPECIFICATIONS 12

TRAY LAYOUT 14

INSTRUMENT LISTING 17

SURGEON DESIGN TEAM:

- **COREY BURAK, MD**
- **PROFESSOR CESARE FALDINI, MD**
- **JOSEPH LOCKER, MD**
- **JEFF PIERSON, MD**
- **SAM SYDNEY, MD**

OPERATIVE TECHNIQUE OVERVIEW



Figure A
Align Osteotomy Guide



Figure B
Femoral Canal Entry



Figure C
Femoral Broaching



Figure D
Calcar Planing



Figure E
Trial Components



Figure F
Femoral Stem Insertion



Figure G
Femoral Head Impaction

PRE-OPERATIVE PLANNING

TOOLS

- A/P radiograph of pelvis centered on the pubic symphysis
- Pencil that will not damage x-ray
- Straight edge
- **Alteon® HA Femoral Stem Template Set** with 120 percent magnification rule *(Figure 1)*
- Goniometer/protractor

Traditional templating methods may be used. For an estimated determination of the required offset, vertical limb length and stem size, the following detailed templating method may be used to help guide the surgeon in final implant choice.

ESTABLISHMENT OF REFERENCE POINTS

On the radiograph, a straight line is drawn across the bottom of the pelvis touching both ischial tuberosities equally. The line is extended far enough to reach each lesser trochanter. Such a line should be perpendicular to the vertically oriented pubic symphysis. If the line is not vertically oriented, it should be confirmed that the patient's pelvis was not tilted when the radiograph was taken. If the ischial tuberosities are poorly defined, the line should be drawn through the inferior portion of both obturator foramina or the inferior aspect of both teardrops. Templating is recommended to determine the unique anatomic and mechanical features of the patient, and to establish pre-operative reference points that assist in the reconstruction of the patient's natural femoral anatomy.

DETERMINE LIMB LENGTH

Select and position the appropriate Alteon® HA Femoral Stem Template Set over the x-ray so the central axis of the stem aligns with the central axis of the femoral canal and one of the available femoral head options creates the desired center of rotation. The Alteon HA Femoral Stem is designed to seat in cancellous bone, therefore cortical contact with the stem outline should be avoided when templating. When the template is in the desired position, the level of the femoral neck cut and femoral head center of rotation is marked through the punch-outs provided on the template. Record the appropriate size, lateral offset (Standard or Extended), femoral head offset and level of the femoral neck resection.

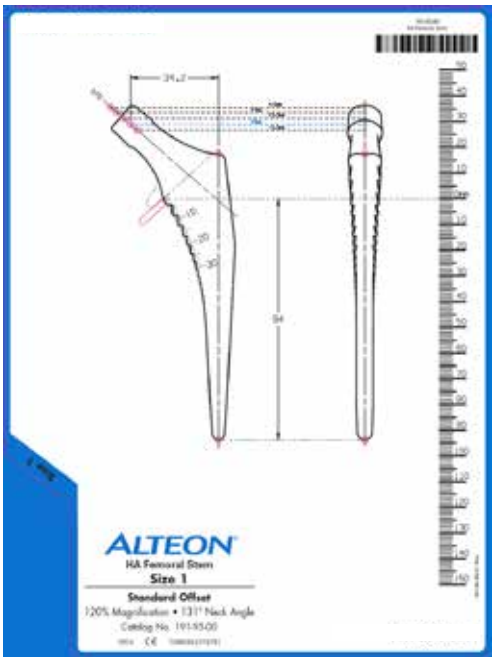

Figure 1
Alteon HA Femoral Stem X-ray Template

SURGICAL TIPS

• For digital templating, follow the software manufacturer's instructions for use while following the preceding instructions regarding placement and implant fit.

• Templating is an important part of pre-operative preparation, and should only serve as a guide. Templating is generally plus or minus two sizes of the final implant size depending on bone quality. Final decision making concerning fit, size and soft-tissue tensioning occurs in the operating room using available options of stem offset, head offset and liner configuration.



Figure 2
Align Osteotomy Guide

APPROACH AND OSTEOTOMY

The surgical approach of choice is based upon the degree of surgical experience and preference. Align the **Osteotomy Guide** with the long axis of the femur and mark the level of the femoral osteotomy within the slot on the guide as determined in the pre-operative templating exercise *(Figure 2)*. Resect the femoral neck at this level in order to help re-establish the patient's limb length, lateral offset, and center of rotation of the femoral head.

SURGICAL TIPS

Prior to using the osteotomy guide, ensure sufficient exposure such that the center of the femoral head is visible. If necessary, resect any anterior osteophytes from the acetabulum.



Figure 3
Femoral Canal Entry

FEMORAL CANAL ENTRY

Use the **Box Osteotome** to remove a wedge of bone, creating a portal for entry into the femoral canal *(Figure 3)*. This Box Osteotome may aid in establishing an axial position for insertion of broaches. Additional **Canal Entry Tools** can be used to gain access to the femoral canal.

SURGICAL TIPS

- The Box Osteotome and **Modular Canal Entry Tools** are assembled with the **Modular Handle** prior to use. Ensure these tools properly lock into the Modular Handle by aligning the flat surfaces of the tools with the rectangular feature at the end of the handle. An audible click can be heard when the tools are properly connected.
- Utilize the Box Osteotome to remove lateral cortical bone to ensure clearance for the broaches and stem.



Figure 4
Femoral Broaching

Broach Assembly/Disassembly

Assemble the **Broach Handle** to the **Broach** by releasing the locking mechanism, mating the body of the Broach Handle to the superior aspect of the Broach and then engaging the locking mechanism *(Figure 4)*. Check for proper orientation and full engagement. Care should be taken to ensure that the assembly of the instruments is correct.

Femoral Broaching

Broach up progressively, beginning with the smallest size. Insert the Broach into the femoral canal with the desired amount of anteversion. Alternate impaction and withdrawal of the Broach as the final size is approached. Release the Broach Handle from the Broach for trialing once broach is axially and rotationally stable.

SURGICAL TIPS

- If resistance is encountered while preparing the desired stem size, drop down a broach size and re-broach. The **Canal Entry Tools** may also be used throughout the procedure to aid in positioning of the subsequent Broaches or the final implant.
- If rotational stability is to be tested, it should be done on the final broach (after axial stability is achieved), to avoid wallowing out the prepared cancellous bed to ensure proper fit of the final implant.

Note: *While broaching, limit the lateral bending forces applied. Excessive bending forces in the lateral direction may cause the broach post to fracture.*



Figure 5
Calcar Planer Assembly



Figure 6
Proper Calcar Planer Assembly



Figure 7
Improper Calcar Planer Assembly



Figure 8
Calcar Planing

ASSEMBLY TIPS

The assembled **Calcar Planer** *(Figure 6)* is created by threading the **Calcar Planer Shaft** over the **Calcar Planer Adaptor** which captures the **Calcar Planer Blade**. The assembly is tightened, or loosened, using the supplied **Calcar Planer Wrench**. Ensure the hexagonal feature of the adaptor sits within the hexagonal feature on the blade (*Figures 5-7*).

Calcar Preparation
(Mandatory for Collared Stem, Optional for Collarless)

Perform calcar planing, in order to remove any bone that protrudes above the level of the impacted Alteon HA Broach by guiding the Calcar Planer onto the guidance surface feature of the Broach *(Figure 8)*.

SURGICAL TIPS

Start Calcar Planer blade before resting the planer on the bone to minimize risk of bone fracture.

Note: *While calcar planing, ensure the calcar planer remains parallel to the face of the broach. Excessive bending forces to the Calcar Planer may cause it to fracture or wear.*



Figure 9
Trial Components

TRIAL REDUCTION

Trial Component Insertion

Place the appropriate **Neck Trial** onto the guidance surface feature of the Broach. Be sure the correct size and offset (Standard or Extended) Neck Trial is chosen. Make sure, when inserting the Neck Trial, the size and offset etch markings are facing laterally. Select an appropriate **Femoral Head Trial** and assemble for trial reduction *(Figure 9)*.

Trial Component Removal

Decide the final components for implantation. Dislocate the hip, and remove the trial components. Reassemble the Broach Handle to the Broach and remove.

SURGICAL TIPS

The Broaches and Neck Trials include design features to ensure that only the designated Neck Trial will mate with the corresponding size Broach.



Figure 10
Femoral Stem Insertion and Impaction

Figure 11
Femoral Head Impaction

FINAL COMPONENT PLACEMENT

Final Stem Insertion

Select the appropriate Femoral Stem and impact using the desired **Stem Inserter**, ensuring correct version and depth *(Figure 10)*. Another trial reduction can be performed with the final Femoral Stem and Femoral Head Trial.

SURGICAL TIPS

- The Stem Inserters and Femoral Head Impactor are assembled with the **Modular Handle** prior to use. Ensure these tools properly lock into the Modular Handle.
- The non-threaded **Stem Inserters** provide rotational control while impacting the stem.

Femoral Head Impaction

For CoCr heads: Clean and dry the taper of the femoral stem. Place the selected femoral head component onto the taper of the femoral stem and secure it using the Femoral Head Impactor. Apply one or several moderate strikes of the mallet on the Femoral Head Impactor in alignment with the head axis to affix the femoral head to the stem taper.

For Biolox®delta ceramic heads: Clean and dry the taper of the femoral stem. Confirm stem/head compatibility and confirm that the stem and head taper are free of damage. Fit the selected femoral head component onto the stem taper by exerting slight axial pressure on the head component while simultaneously twisting until fully seated. Place the polymer-faced Femoral Head Impactor on the pole of the femoral head and tap gently with a mallet in alignment with the head axis to secure the taper connection *(Figure 11)*. Consult the Instructions for Use accompanying the ceramic femoral head for all installation instructions and warnings.

For Biolox®OPTION heads: After assuring the tapers are clean and dry, assemble the metal adapter and the femoral head per the instructions for use accompanying the Biolox®OPTION components. Clean and dry the taper of the femoral stem. Inspect the stem taper to determine its condition is undamaged or acceptable per the instructions for use accompanying the Biolox®OPTION components. Fit the selected femoral head component onto the stem taper by exerting slight axial pressure on the head component while simultaneously twisting until fully seated. Place the polymer-faced Femoral Head Impactor on the pole of the femoral head and tap gently with a mallet in alignment with the head axis to secure the taper connection. Consult the Instructions for Use accompanying the Biolox®OPTION component for all installation instructions and warnings.

Note: *DO NOT use metal-faced mallets and DO NOT impact forcefully during installation of ceramic components. Excessive impaction force may cause fracture or early failure. DO NOT directly impact femoral head with a mallet.*



Figure 12
Threaded Stem Extraction



Figure 13
Trunion Stem Extraction

FINAL REDUCTION

Reduce the hip and perform a final check of length, range of motion and stability.

IMPLANT REMOVAL

If it is necessary to intraoperatively remove a prosthesis, the **Stem Extractor** may be assembled to the Broach Handle to facilitate removal *(Figures 12 and 13)*.

CLOSURE

Close the wound according to the preferred method.

Stem Size	Collarless		Collared	
	Standard Offset	Extended Offset	Standard Offset	Extended Offset
1	190-00-01	N/A	190-10-01	N/A
2	190-00-02	190-01-02	190-10-02	190-11-02
3	190-20-03	190-21-03	190-30-03	190-31-03
4	190-20-04	190-21-04	190-30-04	190-31-04
5	190-20-05	190-21-05	190-30-05	190-31-05
6	190-20-06	190-21-06	190-30-06	190-31-06
7	190-20-07	190-21-07	190-30-07	190-31-07
8	190-20-08	190-21-08	190-30-08	190-31-08
9	190-20-09	190-21-09	190-30-09	190-31-09
10	190-20-10	190-21-10	190-30-10	190-31-10
11	190-20-11	190-21-11	190-30-11	190-31-11
12	190-20-12	190-21-12	190-30-12	190-31-12
13	190-20-13	190-21-13	190-30-13	190-31-13
14*	190-20-14	190-21-14	190-30-14	190-31-14
15*	190-20-15	190-21-15	190-30-15	190-31-15

** Items are special order; please contact your Sales Representative to order.*

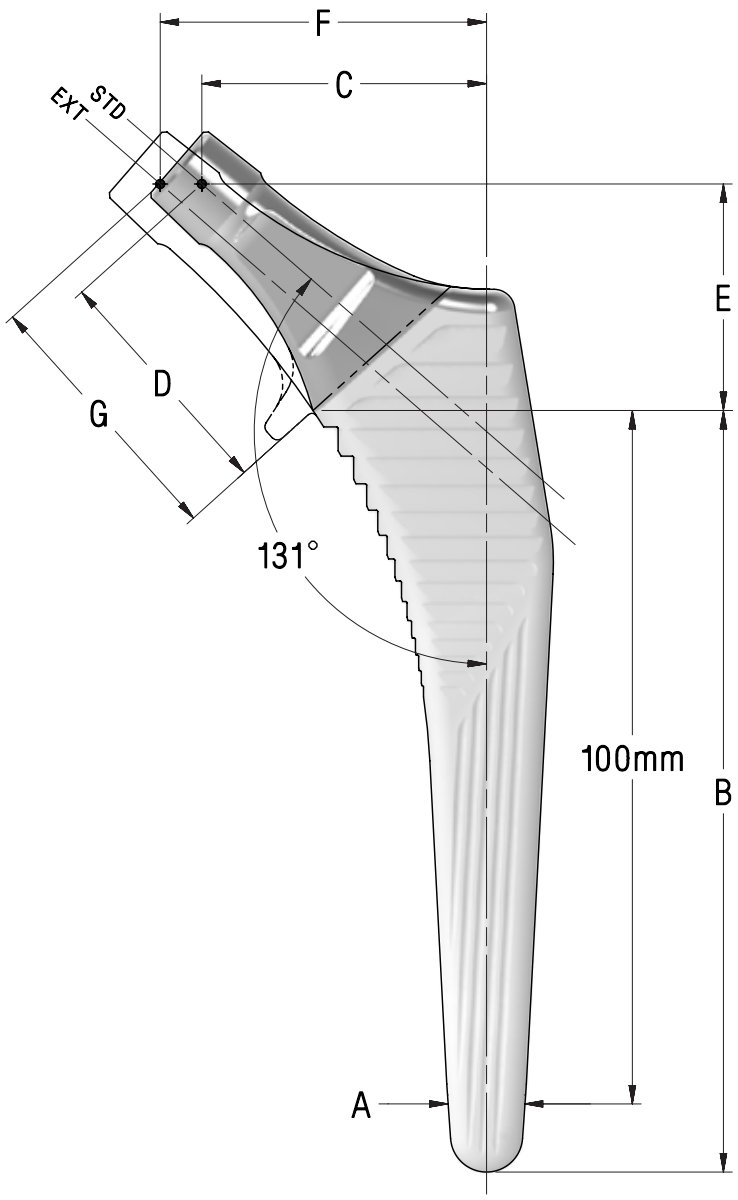
F
C
EXT
STD
E
D
G
131°
100mm
B
A

STANDARD OFFSET

Size	A M to L Width (mm)	B Stem Length (mm)	C Lateral offset with the following head lengths (mm)					D Neck length with the following head lengths (mm)					E Vertical offset with the following head lengths (mm)				
			-3.5	0	3.5	7	10	-3.5	0	3.5	7	10	-3.5	0	3.5	7	10
1	4.3*	94	31.6	**34.2**	36.9	39.5	41.8	26.5	**30.0**	33.5	36.9	39.9	26.7	**29.0**	31.3	33.6	35.5
2	5.2*	94	32.0	**34.7**	37.3	40.0	42.2										
3	6.0*	96	32.5	**35.1**	37.7	40.4	42.7										
4	6.9	99	32.9	**35.5**	38.2	40.8	43.1										
5	7.7	102	34.9	**37.6**	40.2	42.9	45.1	29.0	**32.5**	36.0	39.4	42.4	28.6	**30.9**	33.2	35.5	37.4
6	8.9	104	35.5	**38.2**	40.8	43.4	45.7										
7	10.0	107	36.1	**38.7**	41.4	44.0	46.3										
8	11.2	110	38.4	**41.1**	43.7	46.3	48.6	31.5	**35.0**	38.5	41.9	44.9	30.4	**32.7**	35.0	37.3	39.2
9	12.3	113	39.0	**41.6**	44.3	46.9	49.2										
10	13.5	115	39.6	**42.2**	44.8	47.5	49.7										
11	14.6	118	41.9	**44.5**	47.1	49.8	52.1	34.0	**37.5**	41.0	44.4	47.4	32.2	**34.5**	36.8	39.1	41.0
12	16.0	121	42.6	**45.2**	47.9	50.5	52.8										
13	17.5	123	43.3	**45.9**	48.6	51.2	53.5										
14**	18.9	126	44.0	**46.6**	49.3	51.9	54.2										
15**	20.3	129	44.7	**47.4**	50.0	52.6	54.9										

EXTENDED OFFSET

Size	A M to L Width (mm)	B Stem Length (mm)	F Lateral offset with the following head lengths (mm)					G Neck length with the following head lengths (mm)					E Vertical offset with the following head lengths (mm)				
			-3.5	0	3.5	7	10	-3.5	0	3.5	7	10	-3.5	0	3.5	7	10
2	5.2*	94	38.0	**40.7**	43.3	46.0	48.2	30.5	**34.0**	37.5	40.9	43.9	26.7	**29.0**	31.3	33.6	35.5
3	6.0*	96	38.5	**41.1**	43.7	46.4	48.7										
4	6.9	99	38.9	**41.5**	44.2	46.8	49.1										
5	7.7	102	40.9	**43.6**	46.2	48.9	51.1	33.0	**36.5**	40.0	43.4	46.4	28.6	**30.9**	33.2	35.5	37.4
6	8.9	104	41.5	**44.2**	46.8	49.4	51.7										
7	10.0	107	42.1	**44.7**	47.4	50.0	52.3										
8	11.2	110	44.4	**47.1**	49.7	52.3	54.6	35.5	**39.0**	42.5	45.9	48.9	30.4	**32.7**	35.0	37.3	39.2
9	12.3	113	45.0	**47.6**	50.3	52.9	55.2										
10	13.5	115	45.6	**48.2**	50.8	53.5	55.7										
11	14.6	118	47.9	**50.5**	53.1	55.8	58.1	38.0	**41.5**	45.0	48.4	51.4	32.2	**34.5**	36.8	39.1	41.0
12	16.0	121	48.6	**51.2**	53.9	56.5	58.8										
13	17.5	123	49.3	**51.9**	54.6	57.2	59.5										
14**	18.9	126	50.0	**52.6**	55.3	57.9	60.2										
15**	20.3	129	50.7	**53.4**	56.0	58.6	60.9										

** Projected width. For comparison purposes only.* ***Items are special order; please contact your Sales Representative to order.*

TRAY LAYOUT

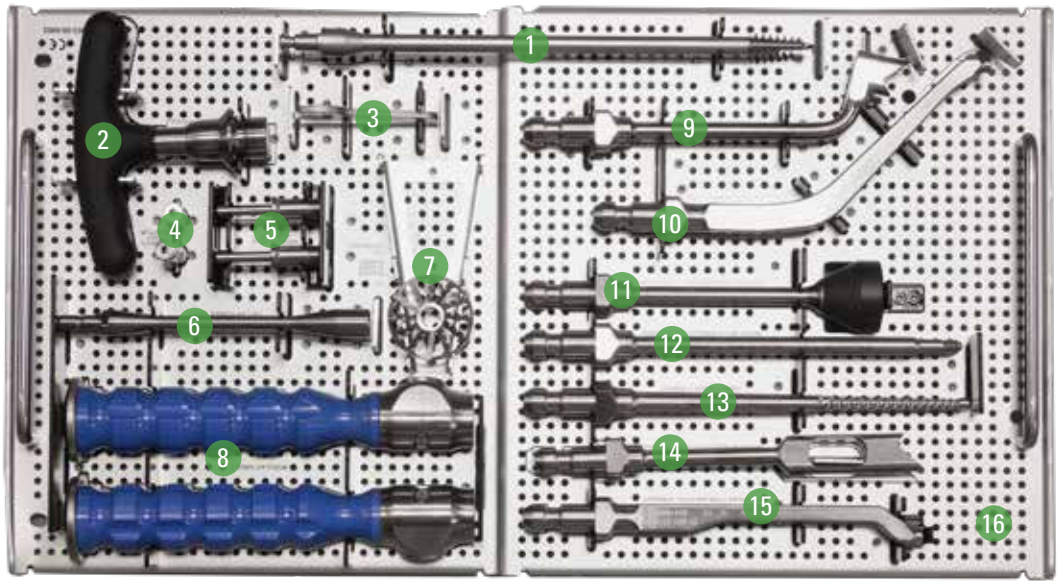

Alteon Common Femoral Instruments (Upper Level Tray)

Site	Item	Item Description
Not Pictured	10-111-00-0001	Instrument Outer Case, Single-Level
Not Pictured	10-301-01-0001	Instrument Outer Case, Lid
1	167-00-01†	Corkscrew, Sharp
2	301-07-70	Small T-Handle
3	01-003-04-0005	Calcar Planer Wrench
4	01-003-04-0003	Calcar Planer Bushing, Broach Post Adaptor
5	01-003-04-0004	Calcar Planer Bushing, Broach Hole Adaptor
6	01-003-04-0001	Calcar Planer Assembly, Shaft
7	01-003-04-0002†	Calcar Planer Blade, 1.5"
8	01-001-00-0001	Modular Handle
9	01-001-05-0003†	Modular Box Osteotome, Reduced Offset
10	01-001-01-0002	Modular Stem Inserter, Offset
11	01-001-03-0001	Modular Femoral Head Impactor
12	01-001-01-0003	Modular Stem Inserter, Threaded
13	01-001-06-0001†	Modular Straight Canal Finder, Blunt
14	01-001-05-0001†	Modular Box Osteotome, Straight
15	01-001-01-0001	Modular Stem Inserter, Straight
16	01-003-00-0002	Common Femoral Tray, Upper Inner Tray

† Instruments have sharp features; use caution when handling these instruments to avoid injury to user or patient.

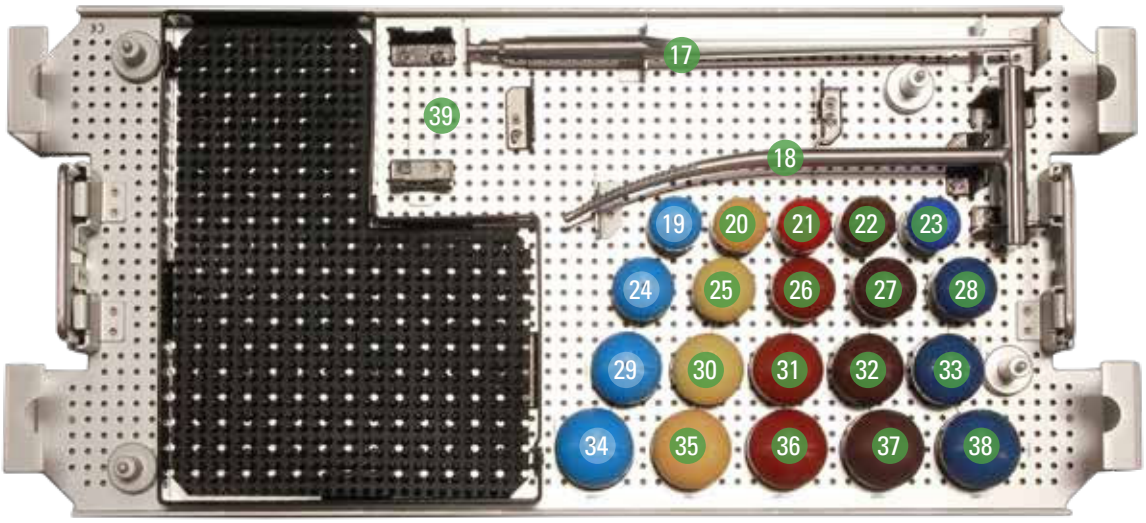

Alteon Common Femoral Instruments (Lower Level Tray)

Site	Item	Item Description
17	01-003-07-0001†	Starter Reamer
18	01-003-06-0003†	Curved Canal Finder, Blunt
19	143-28-10	Femoral Head Trial, 28, +10mm, O-Ring, 12/14
20	143-28-07	Femoral Head Trial, 28, +7mm, O-Ring, 12/14
21	143-28-03	Femoral Head Trial, 28, +3.5mm, O-Ring, 12/14
22	143-28-00	Femoral Head Trial, 28, +0mm, O-Ring, 12/14
23	143-28-93	Femoral Head Trial, 28, -3.5mm, O-Ring, 12/14
24	143-32-10	Femoral Head Trial, 32, +10mm, O-Ring, 12/14
25	143-32-07	Femoral Head Trial, 32, +7mm, O-Ring, 12/14
26	143-32-03	Femoral Head Trial, 32, +3.5mm, O-Ring, 12/14
27	143-32-00	Femoral Head Trial, 32, +0mm, O-Ring, 12/14
28	143-32-93	Femoral Head Trial, 32, -3.5mm, O-Ring, 12/14
29	143-36-10	Femoral Head Trial, 36, +10mm, O-Ring, 12/14
30	143-36-07	Femoral Head Trial, 36, +7mm, O-Ring, 12/14
31	143-36-03	Femoral Head Trial, 36, +3.5mm, O-Ring, 12/14
32	143-36-00	Femoral Head Trial, 36, +0mm, O-Ring, 12/14
33	143-36-93	Femoral Head Trial, 36, -3.5mm, O-Ring, 12/14
34	143-40-10*	Femoral Head Trial, 40, +10mm, O-Ring, 12/14
35	143-40-07*	Femoral Head Trial, 40, +7mm, O-Ring, 12/14
36	143-40-03*	Femoral Head Trial, 40, +3.5mm, O-Ring, 12/14
37	143-40-00*	Femoral Head Trial, 40, +0mm, O-Ring, 12/14
38	143-40-93*	Femoral Head Trial, 40, -3.5mm, O-Ring, 12/14
39	01-003-00-0001	Common Femoral Tray, Lower Inner Tray

**Special Order Only.* *† Instruments have sharp features; use caution when handling these instruments to avoid injury to user or patient.*

TRAY LAYOUT

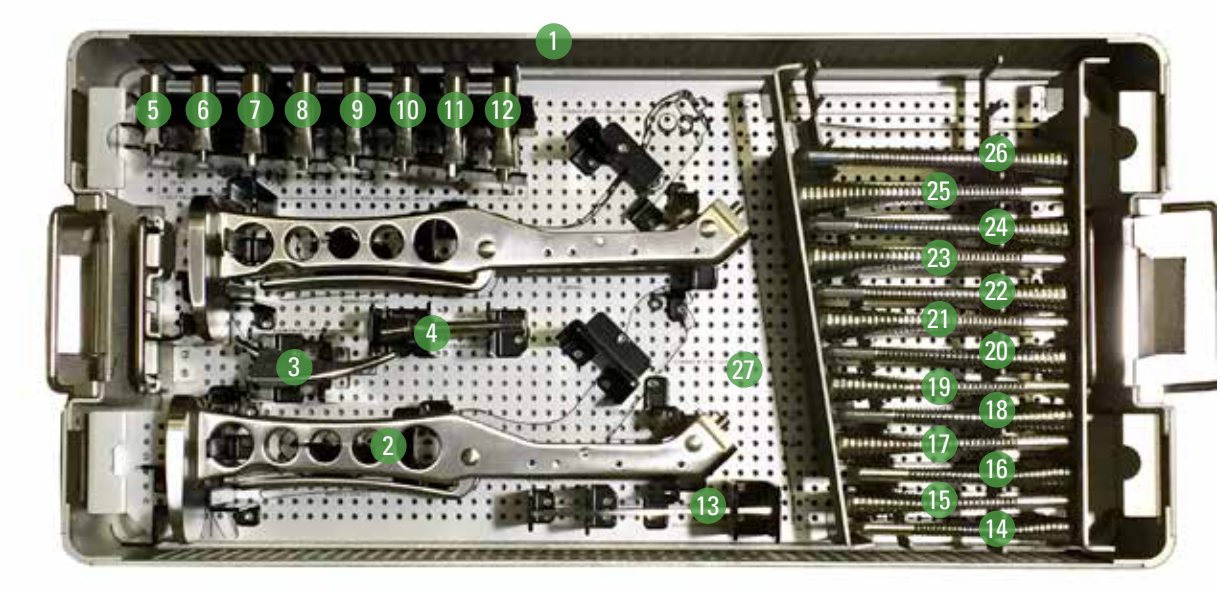

Alteon HA Femoral Stem Instruments (Posterior Approach)

Site	Qty	Item	Item Description
Not Pictured	1	10-301-00-0001	Instrument Outer Case, Lid
1	1	10-111-00-0001	Instrument Outer Case, Single Level
2	2	01-003-02-0003	Broach Handle, Straight
3	1	01-003-06-0006	Canal Finder, Starter Broach
4	1	01-003-10-0002	Stem Extractor, Threaded
5	1	01-003-22-0104	Alteon Neck Trial, STD, Size 1-4
6	1	01-003-22-0507	Alteon Neck Trial, STD, Size 5-7
7	1	01-003-22-0810	Alteon Neck Trial, STD, Size 8-10
8	1	01-003-22-1117	Alteon Neck Trial, STD, Size 11-17
9	1	01-003-23-0104	Alteon Neck Trial, EXT, Size 1-4
10	1	01-003-23-0507	Alteon Neck Trial, EXT, Size 5-7
11	1	01-003-23-0810	Alteon Neck Trial, EXT, Size 8-10
12	1	01-003-23-1117	Alteon Neck Trial, EXT, Size 11-17
13	1	189-00-00	Alteon Osteotomy Guide
14	1	191-02-01	HA Compaction Broach, Size 1
15	1	191-02-02	HA Compaction Broach, Size 2
16	1	191-03-03	HA Compaction Broach, Size 3
17	1	191-03-04	HA Compaction Broach, Size 4
18	1	191-03-05	HA Compaction Broach, Size 5
19	1	191-03-06	HA Compaction Broach, Size 6
20	1	191-03-07	HA Compaction Broach, Size 7
21	1	191-03-08	HA Compaction Broach, Size 8
22	1	191-03-09	HA Compaction Broach, Size 9
23	1	191-03-10	HA Compaction Broach, Size 10
24	1	191-03-11	HA Compaction Broach, Size 11
25	1	191-03-12	HA Compaction Broach, Size 12
26	1	191-03-13	HA Compaction Broach, Size 13
27	1	189-89-03	Alteon HA, Inner Tray

*ADDITIONAL INSTRUMENTS:

Item	Item Description	Image
143-22-00	Femoral Head Trial, 12/14 22 +0	
143-22-03	Femoral Head Trial, 12/14 22 +3.5	
143-22-07	Femoral Head Trial, 12/14 22 +7	
143-22-10	Femoral Head Trial, 12/14 22 +10	
01-003-02-0001	Broach Handle, Curved, Single Offset	
01-003-02-0004	Broach Handle, Dual Offset, Left	
01-003-02-0005	Broach Handle, Dual Offset, Right	
01-003-04-0007	Calcar Planer Wrench, Long	
01-003-10-0001	Stem Extractor, Trunnion Adaptor	
01-003-06-0007†	Canal Finder, Lateralizing Broach	
01-003-06-0008	Canal Finder, Fully Toothed Broach	
191-03-14* 191-03-15*	HA Compaction Broach, Size 14 HA Compaction Broach, Size 15	
4251-4080***	Straight Anterior Broach Handle	

**Special Order Only.*
† Instruments have sharp features; use caution when handling these instruments to avoid injury to user or patient.
****This instrument is not included in the Alteon trays, but can be ordered and shipped separately, which includes its IFU and reprocessing instructions.*

These products are manufactured by Exactech, Inc. and distributed by Advita Ortho, LLC. Not all products are available in every market.

For additional device information, refer to the manufacturer's Instructions for Use for information including, but not limited to, a device description, indications, contraindications, precautions and warnings. For further product information, please contact Customer Service, Advita Ortho, LLC 2320 NW 66th Court, Gainesville, Florida 32653-1630, USA. (833) 4-ADVITA.

Exactech, as the manufacturer of this device, does not practice medicine and is not responsible for recommending the appropriate surgical technique for use on a particular patient. Because this information does not purport to constitute any diagnostic or therapeutic statement with regard to any individual medical case, each patient must be examined and advised individually, and this document does not replace the need for such examination and/or advice in whole or in part. These guidelines are intended to be solely informational, and each surgeon must evaluate the appropriateness of these guidelines based on his or her personal medical training and experience. Prior to use of this system, the surgeon should refer to the product package insert for information including, but not limited to, comprehensive warnings, precautions, indications for use, contraindications and adverse effects.

The products discussed herein may be available under different trademarks in different countries. All copyrights, and pending and registered trademarks, are property of Advita Ortho, LLC. **This material is intended for the sole use and benefit of the Advita Ortho sales force and physicians; it is not intended for laypersons.** It should not be redistributed, duplicated or disclosed without the express written consent of Advita Ortho, LLC. ©2026 Advita Ortho, LLC. OPTECH-000193/B 071726

advita ORTHO

GLOBAL HEADQUARTERS
2320 NW 66TH COURT
GAINESVILLE, FL 32653-1630 USA

(833) 4-ADVITA
advita.com